brother

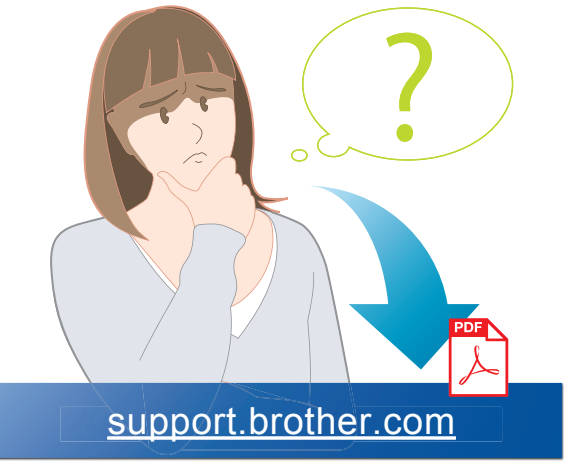


LAJ838001

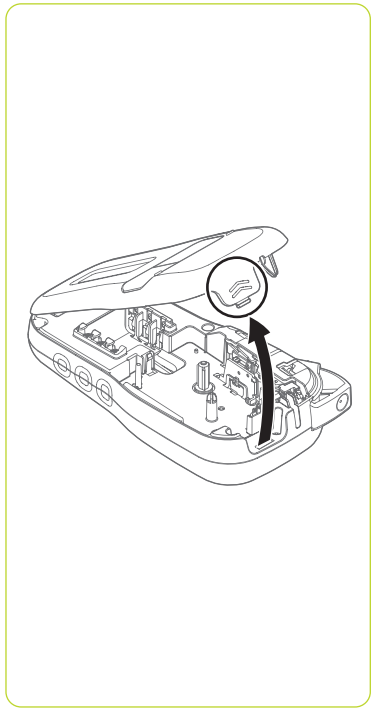

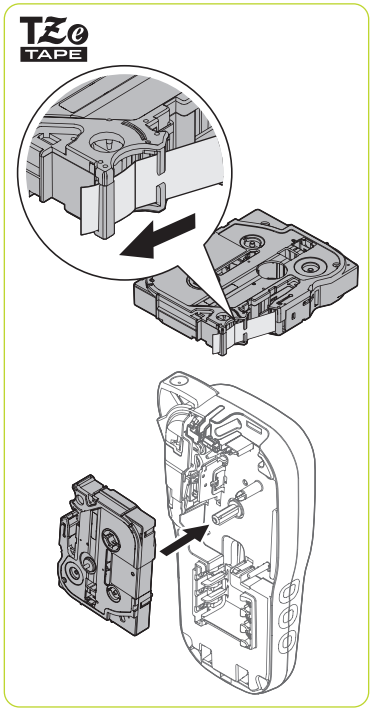


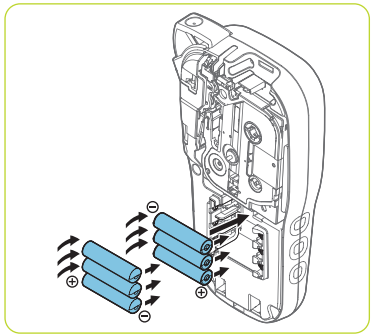

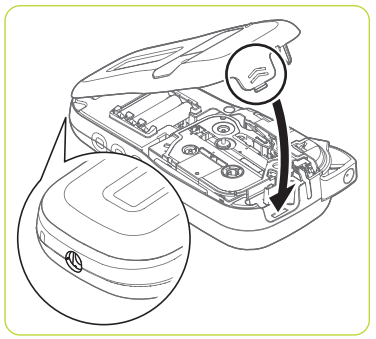

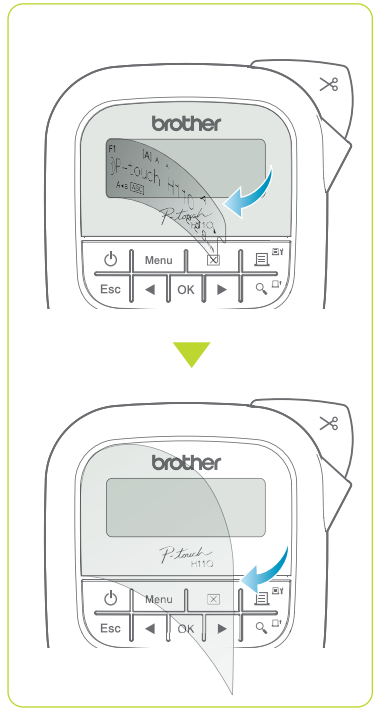


1 ⏻

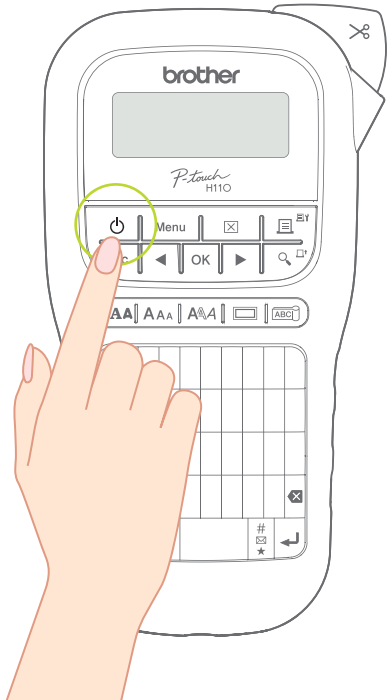


2 A – Z

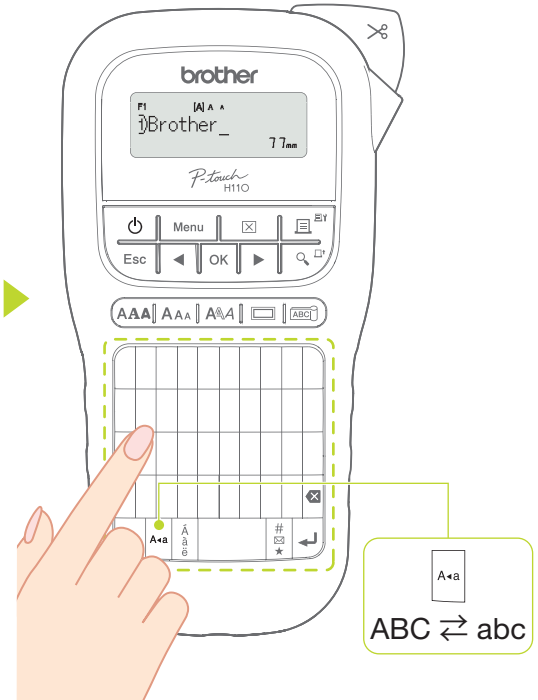


3 ⎘

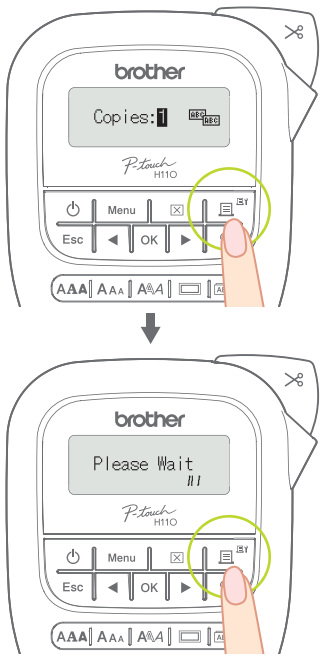


4

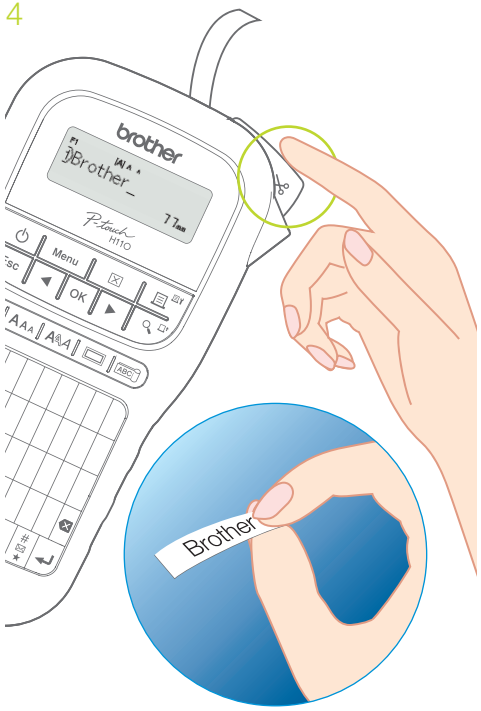

1 Menu

2 Language

3 OK

4 English

5 OK

English
Español
Français
Hrvatski
Italiano
Magyar
Melayu
Nederlands
Norsk
Polski
Português
Portug.(BR)
Română
Slovenski
Slovenský
Suomi
Svenska
Türkçe
Čeština
Dansk
Deutsch

support.brother.com

1 AAA

2 Large

3 OK

ABCDEF
ABCDEF
ABCDEF

1 AAA

2 Bold

3 OK

1

2 ABCDE

3 OK

ABCDE
ABCDE

A + B + C

ABC

A + B + C

abc

A + B + C + D + E + F

ABCDEF

ABCDEF

A + B + C + ↵ + D + E + F

ABC
DEF

A + B + C + ☒

Text&Format

A + B + C + ⌫

AB

1 ABC

2

3 OK

4

5 OK

1 Menu

2 Decorative

3 OK

4 Text

5 OK

6

1 Menu

2 Decorative

3 OK

4 Pattern

5 OK

6

A – Z + Äé

OK

[Basic]

Punctuation
Mathematics
Brackets

[Pictograph]

Office
Signs
Datacom/AV